BuzziCocoon
Product Specification Sheet

This document contains technical information about the BuzziCocoon

BUZZI SPACE

www.buzzi.space

An acoustic sanctuary
BuzziCocoon can easily create private and focused works zones when placed on a desk or large communal table. Or hang BuzziCocoon on the wall for an instant telephone booth to take a call. The simple and voluminous standalone solution can work in any space including offices and libraries to help mitigate excessive noise.

Design by BuzziSpace Studio

General

BuzziCocoon

Upholstered acoustic foam element
Cover: Fabric, Trevira CS+|CS, Revive 1, Clara 2, Remix 3, Hero, Tonus 4, Memory 2

Dry Use

Assembled

Acoustics

Absorption

Attenuation

Low Tones

Mid tones

High tones

Content

Configurations	3
Components	3
Fabrics	4
Dimensions	5
Acoustics	9

Configurations

BuzziCocoon

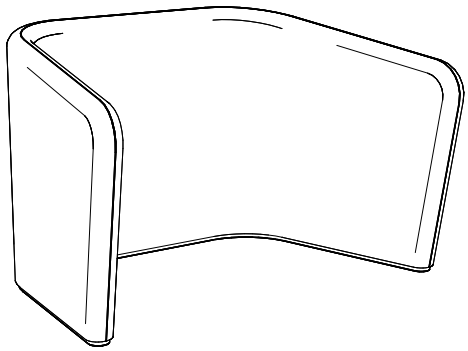

Upholstered acoustic foam element
Cover: Fabric, Trevira CS+|CS, Revive 1, Clara 2, Remix 3, Hero, Tonus 4, Memory 2

Length: 107 cm | 42.13”
Height: 64 cm | 25.20”
Width: 72 cm | 28.35“

9,3 kg | 20.50 lbs

The BuzziCocoon is recommended for mounting on walls made of concrete or brick.
Hollow walls have to be reinforced on the backside of the wall. Do use suitable mounting.

Components

Wall mounting

BuzziCocoon can be mounted on the wall.

The two black round hooks need to be screwed into the wall (always included).
Hang the two leather straps over the round hooks.

Desk divider

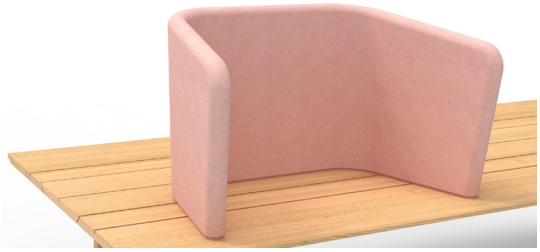

Freestanding desk divider.
Two desk positions possible.

Fabrics

Fabric

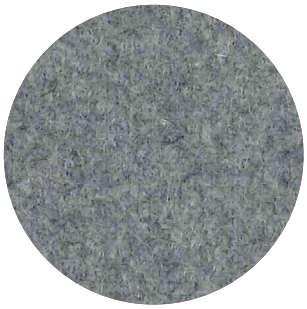

Category A
Composition 70% Recycled Wool, 25% Recycled Polyacryl, 5% Recycled Other Fabrics
Weight 405 g/m² | 11.94 oz/yd²
Abrasion resistance 40.000 Martindale, 50,000 Wyzenbeek
Flammability EU: EN 1021.1/2006 | BS EN 1021.1/2006 (cigarette). EN 1021.2/2006 | BS EN 1021.2/2006 (match)
USA: CAL TB 117 | ASTM E84 CLASS A
Fastness to light EU: 4 | USA 4
Fastness to rubbing EU: Wet 3-4 | Dry 4-5
Fastness to crocking USA: Wet 5 | Dry 5

Trevira CS+|CS

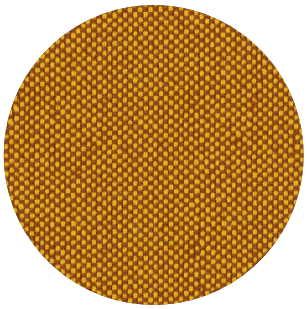

Category A
Weight 420 g/m² | 12.39 oz/yd²
Composition 100% Polyester, Trevira CS
Abrasion resistance 100.000 Martindale, 90,000 Wyzenbeek
Flammability BS 5852 part II: CRIB 5 | BS 7176 Medium Hazard
USA: CAL TB 117 | M1 | B1 | EN 1021/1-2 |C1 | IMO Res. A652 (16)
Fastness to light EU: 6 | USA 5
Fastness to rubbing EU: Wet 4-5 | Dry 4-5
Fastness to crocking USA: Wet 5 | Dry 5

Clara 2

kvadrat

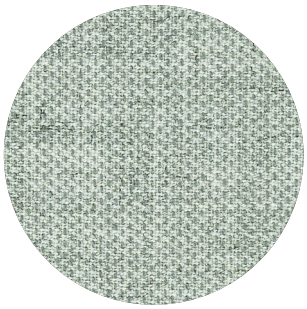

Category B
Composition 92% new wool, 8% nylon
Weight 400 g/lin.m
Abrasion resistance 80.000 Martindale rubs, EN ISO 12947
Flammability EN 1021-1/2 | BS 5852, ignition source 2–3 | DIN 4102 B2
NF D 60 013 | UNI 9175 1IM | US Cal. Tech. Bull. 117, Sec. E
NFPA 260 | IMO A.652(16)
Fastness to light Note 5-7, ISO 105-B02
Fastness to rubbing (ISO) dry 4-5, wet 4
Pilling Note 4, EN ISO 12945

Remix 3

kvadrat

Category B
Composition 90% new wool, 10% nylon
Weight 415 g/lin.m
Abrasion resistance 100.000 Martindale rubs, EN ISO 12947
Flammability EN 1021-1/2 | BS 5852 part 1
Önorm B1/Q1 | NF D 60 013 | UNI 9175, 1IM
AS/NZS 1530.3 | Cal. Tech. Bull. 117-2013
NFPA 260 | IMO FTP Code 2010:Part 8
Fastness to light Note 5-7, ISO 105-B02
Fastness to rubbing (ISO) dry 4-5, wet 4
Pilling Note 4, EN ISO 12945

Hero

kvadrat

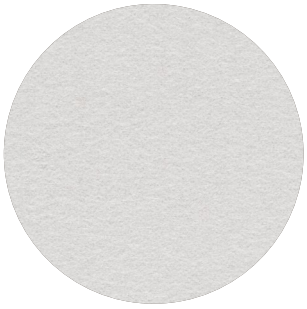

Category C
Composition 96% new wool, 4% nylon
Weight 580 g/lin.m
Abrasion resistance 45.000 Martindale rubs, EN ISO 12947
Flammability EN 1021-1/2 | DIN 4102 B2 | NF D 60 013
UNI 9175 1IM | US Cal. Bull. 117-2013 | NFPA 260
IMO A.652 (16)
Fastness to light Note 5-6, ISO 105-B02
Fastness to rubbing (ISO) dry 4-5, wet 4-5
Pilling Note 3-4, EN ISO 12945

Tonus 4

kvadrat

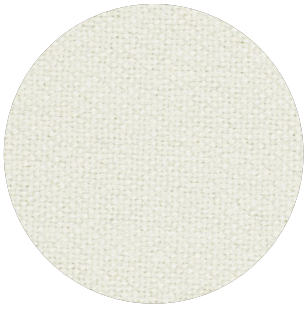

Category D
Composition 90% new wool, 10% Helanca
Weight 665 g/lin.m
Abrasion resistance 100.000 Martindale rubs, EN ISO 12947
Flammability EN 1021-1/2 | BS 5852 part 1 | DIN 4102 B2
Önorm B1/Q1 | NF D 60 013 | UNI 9175 1IM
US Cal. Bull. 117-2013 | NFPA 260 | IMO A.652 (16)
Fastness to light Note 5-7, ISO 105-B02
Fastness to rubbing (ISO) dry 3-5, wet 3-5
Pilling Note 3, EN ISO 12945

Memory 2

kvadrat

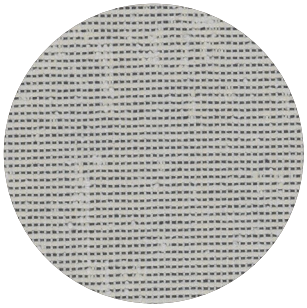

Category E
Composition 100% Trevira CS
Weight 700 g/lin.m
Abrasion resistance
35.000 rubs acc. to the Martindale method, EN ISO 12947
Flammability EN 1021-1/2 | DIN 4102 B1 | Önorm B1/Q1
NF D 60 013 | NF P 92 507 M1 | UNI 9175 1IM
UNI 9177 classe 1 | US Cal. Tech. Bull. 117
IMO A.652 (16)
Fastness to light Note 5-8, ISO 105-B02
Fastness to rubbing (ISO) dry 4-5, wet 4-5
Pilling Note 4, EN ISO 12945

Dimensions

BuzziCocoon

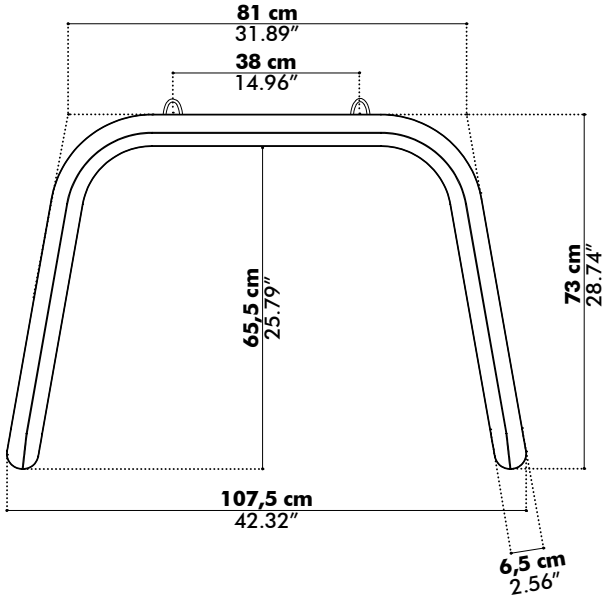

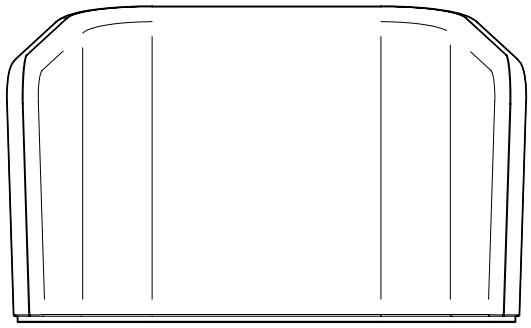

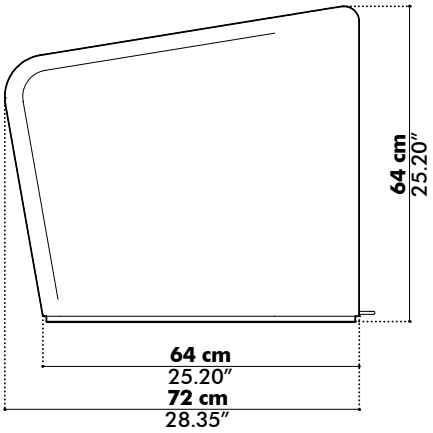

BuzziCocoon Round Hook

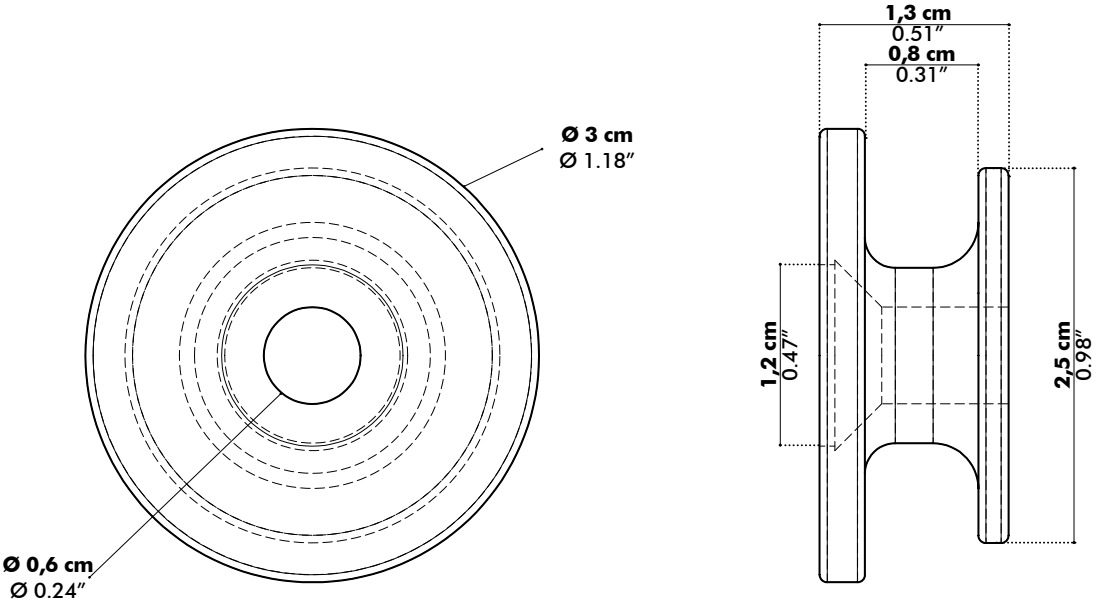

Acoustics

BuzziCocoon

Equivalent sound absorption area in m² per object

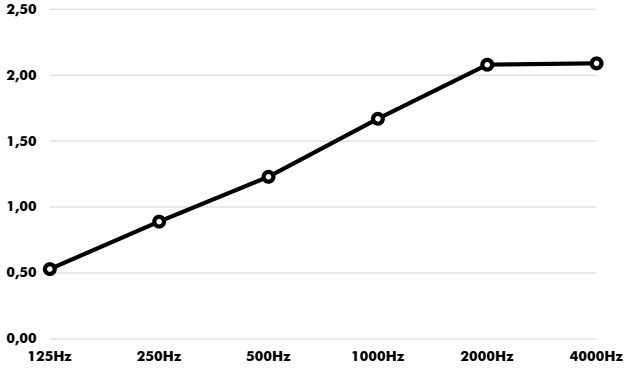

Hz	Aeq/m²
125	0.53
250	0.89
500	1.23
1000	1.67
2000	2.08
4000	2.09